Small Feather flag banner

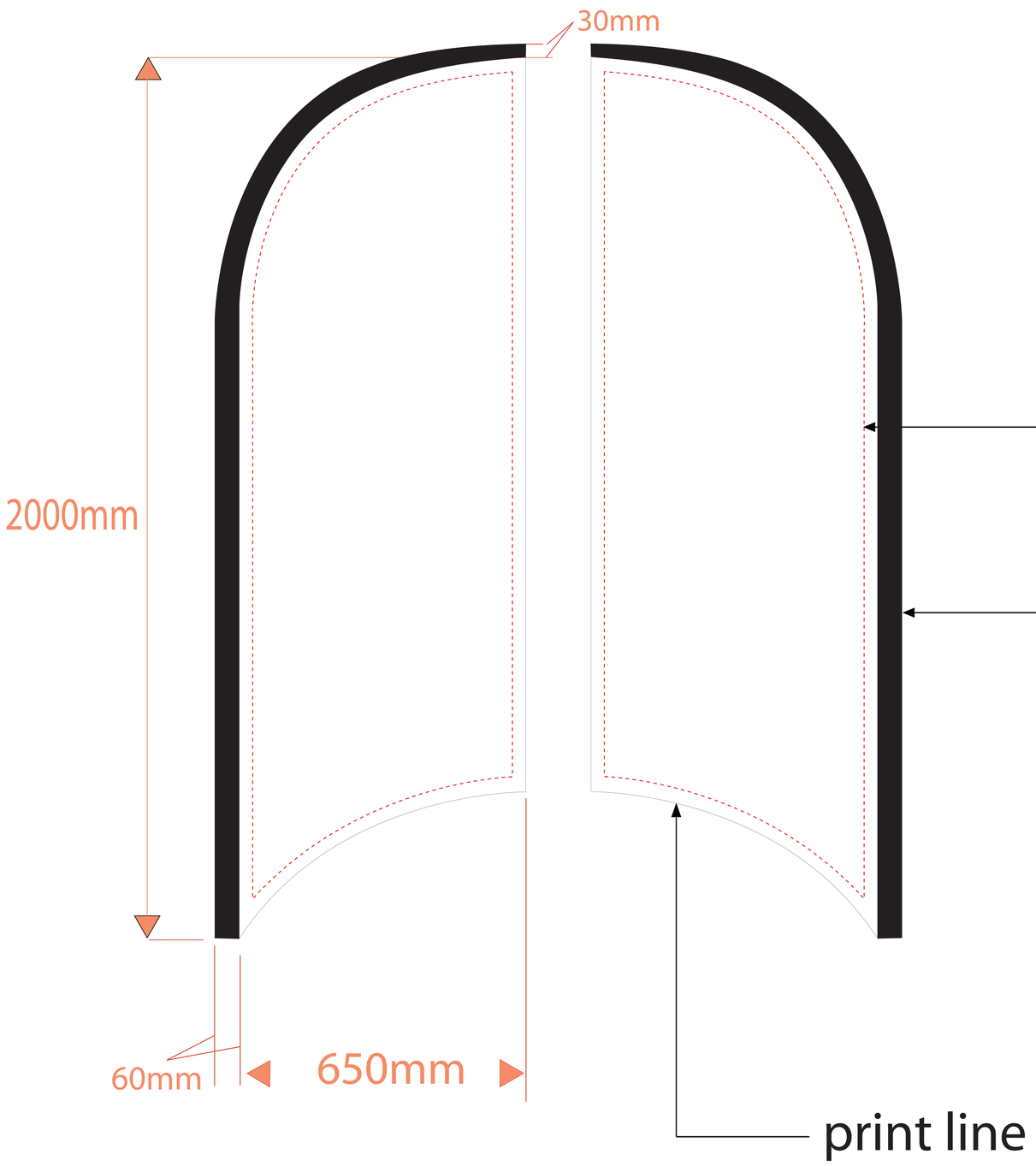

Safe area

Pocket

In order to avoid any vital logos or text from being chopped off, please keep all logos and text within **RED** safe line.

* ALL TEXTS NEED TO BE CONVERTED TO OUTLINES.

* For Single side printing, please choose one of the templates to design artwork (Left or Right).
For Double sided printing, please design on both templates.

Images in the artworks with pixels Over 75dpi at actual size are perfect enough for printing. Pixels below or much over 75dpi are not acceptable.

Scale: 100%

safe area
Print line
pocket